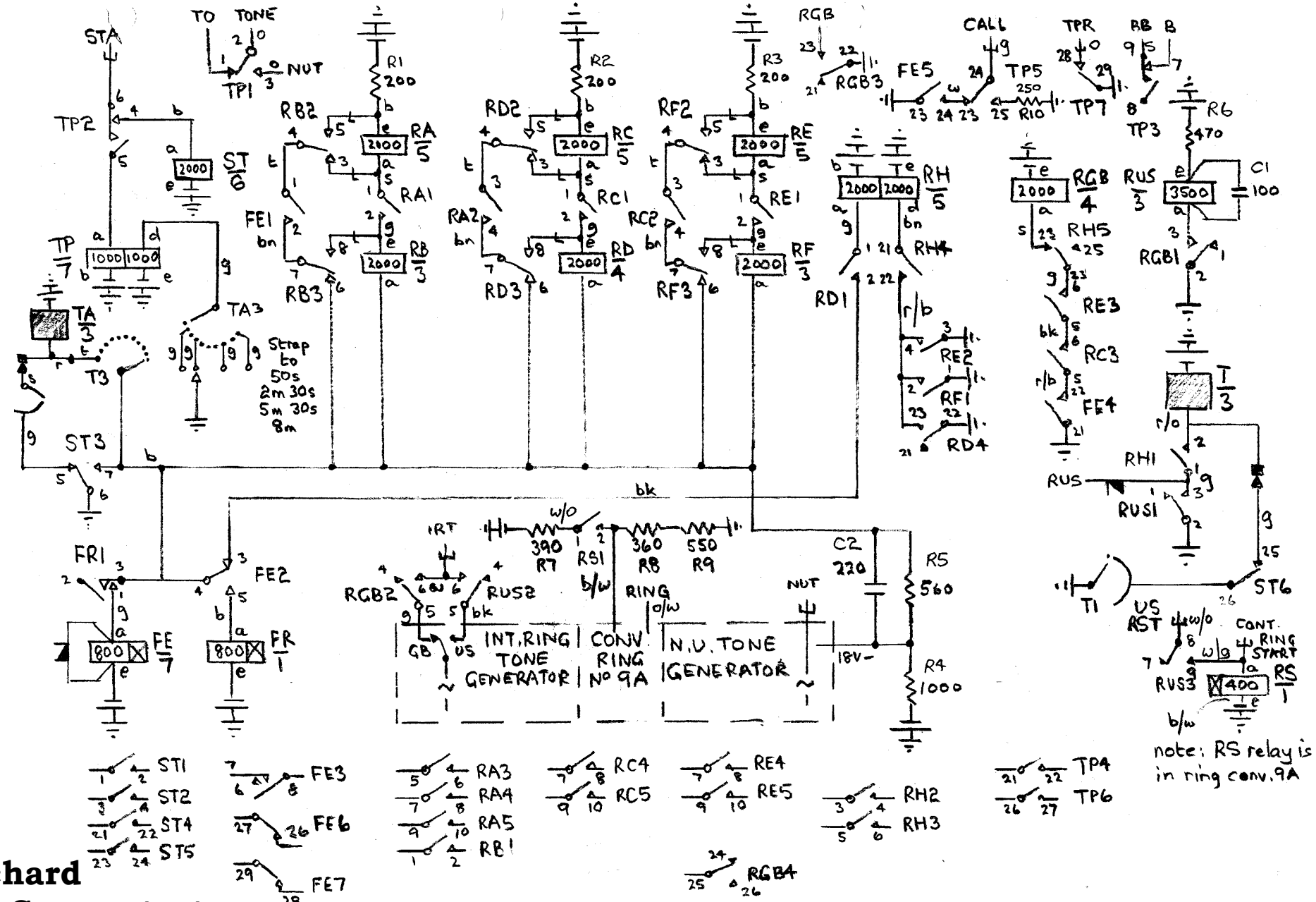


# Norchard
# Line Concentrator
# Tone & Time Pulse Relays

**Dean Forest Railway**