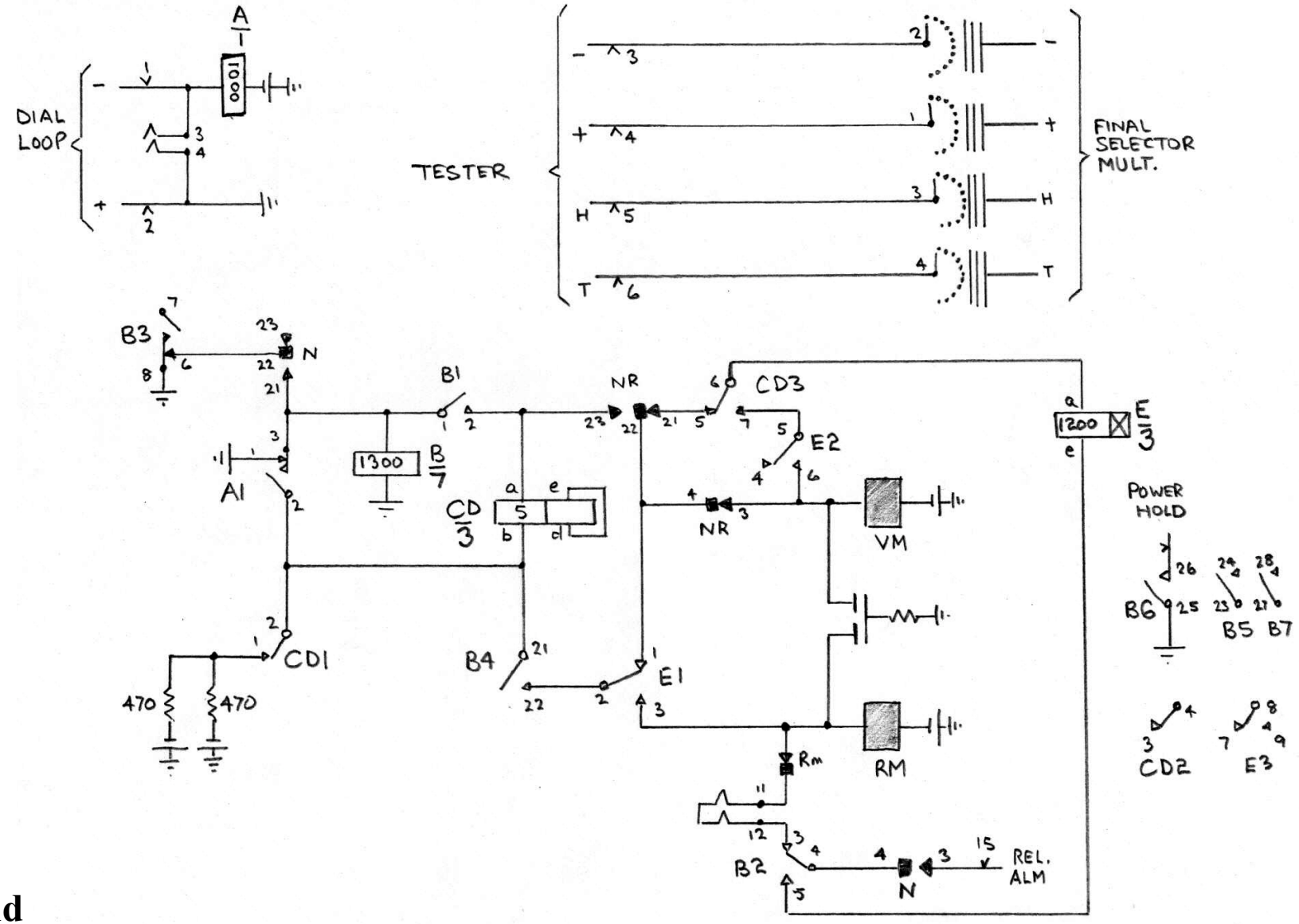

Parkend
Test Selector