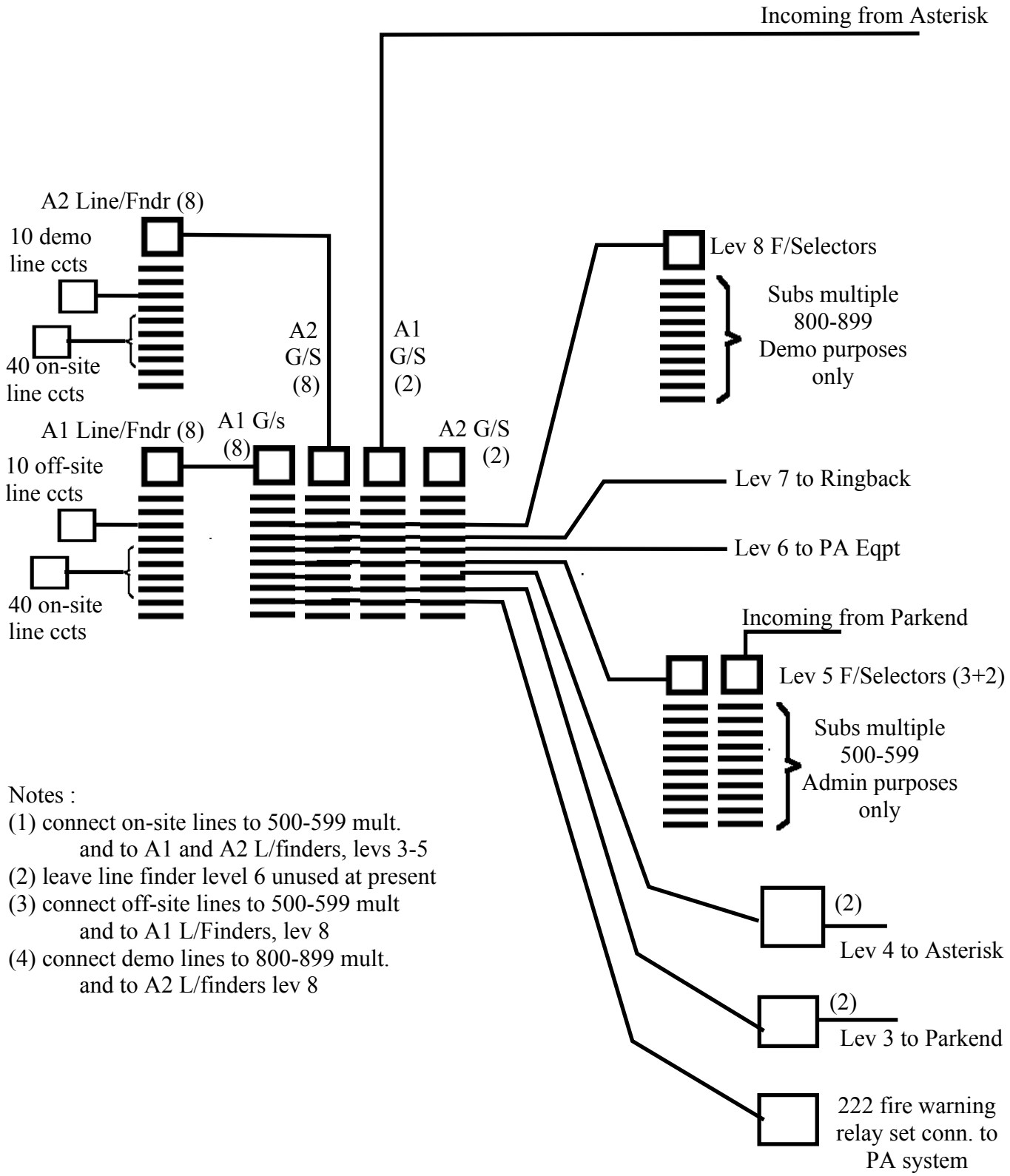

Norchard UAX13 Trunking

Dean Forest Railway