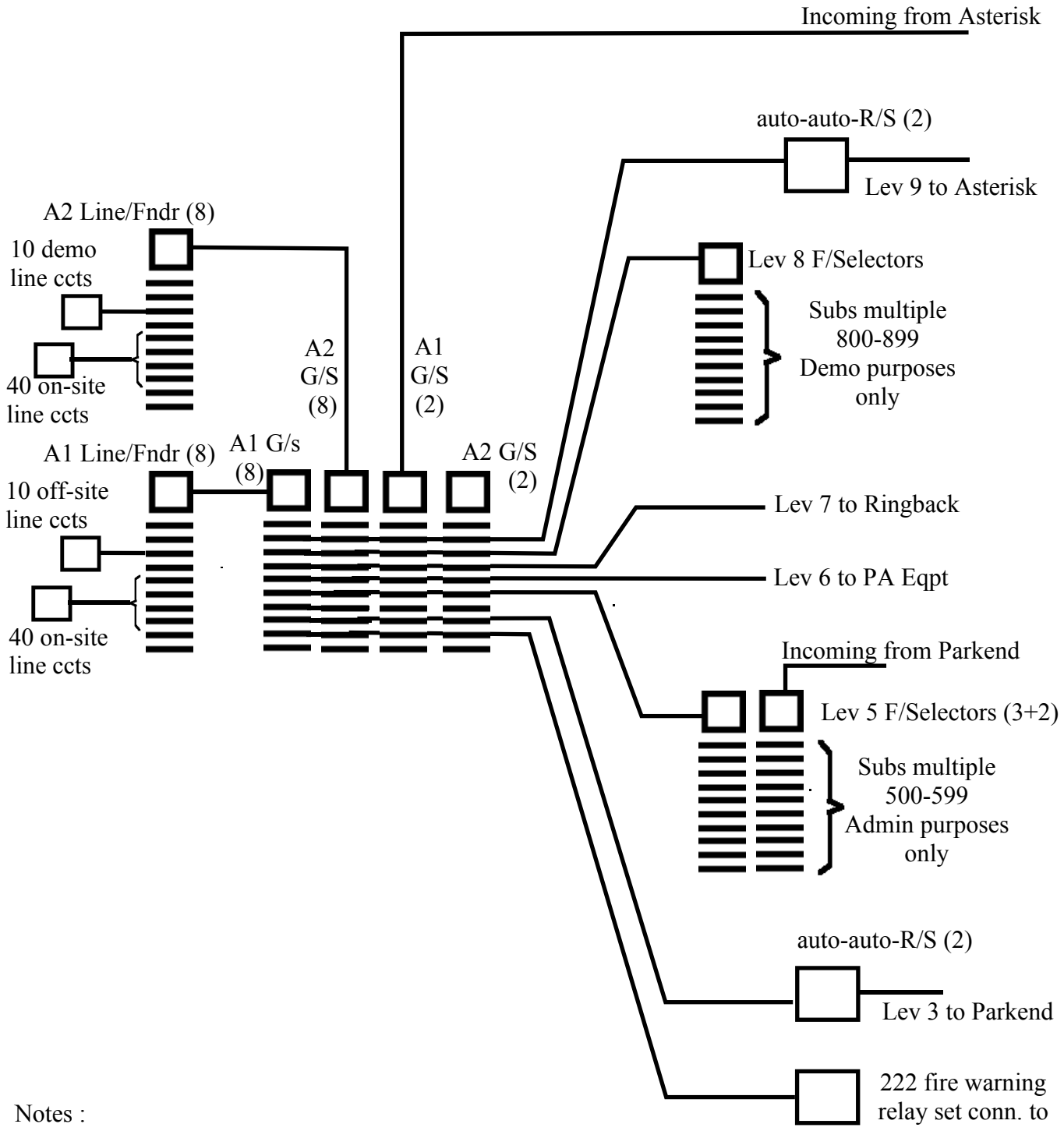

Notes :
(1) connect on-site lines to 500-599 mult. and to A1 and A2 L/finders, levs 3-5
(2) leave line finder level 6 unused at present
(3) connect off-site lines to 500-599 mult and to A1 L/Finders, lev 8
(4) connect demo lines to 800-899 mult. And to A2 L/finders lev 8
(5) strap off-site and demo lines as ccbs on lev 8 of the line finders
(6) levels 1/4/0 are connected to an NU Tone relay circuit

Norchard UAX13 Trunking

Dean Forest Railway